DTST-6 SERIES

6x6
Radial Taping Type

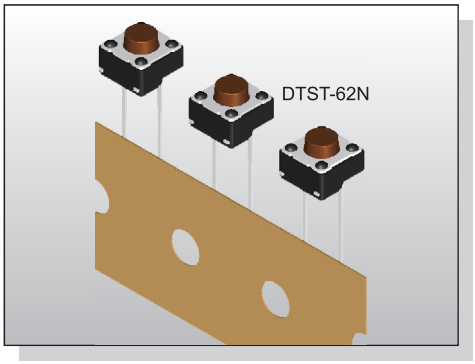

FEATURES

※Radial taping type
※Variety of actuator lengths
※Allow automatic insertion onto PCB.

APPLICATION

※White goods , OA equipment
※Audio, DVD player, TV
※Instrumentation

SPECIFICATION

Contact Rating	50mA, 12V DC
Contact Resistance	100mΩ max.
Insulation Resistance	100MΩ min. 500V DC
Dielectric Strength	250V AC/1 minute
Operating Force	100±50gf, Black(K) 160±50gf, Brown(N) 260±50gf, Red(R) 320±80gf, Salmon(S) 520±130gf, Yellow(Y)
Travel	0.25mm
Operating Life	Phosphor Bronze Dome 50,000 cycles for 520/320gf 100,000 cycles for 260gf 200,000 cycles for 160/100gf
	Stainless Steel Dome 300,000 cycles for 520/320gf 500,000 cycles for 260gf 1,000,000 cycles for 160/100gf
Operating Temp.	-25°C ~ +70°C
Storage Temp.	-30°C ~ +80°C

HOW TO ORDER

D T S T - 6 □ □ - □ - □

- Radial Taping Type
- Height:
  1=4.3mm
  2=5.0mm
  3=7.0mm
  44=7.3mm (SQ.)x2.4mm
  48=7.3mm (SQ.)x2.8mm
  5=9.5mm
  6=13mm
- Operating Force:
  K=Black, 100gf
  N=Brown, 160gf
  R=Red, 260gf
  S=Salmon, 320gf
  Y=Yellow, 520gf
- □=Phosphor Bronze Dome
  S=Stainless Steel Dome
- V=RoHS & Lead Free Solderable
  Q=Halogen Free

CIRCUIT

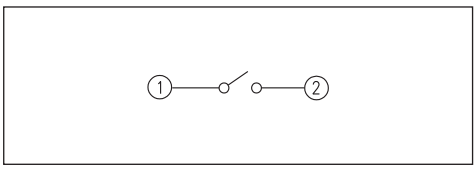

PACKAGE

<Box>
900 pcs

DTST-6

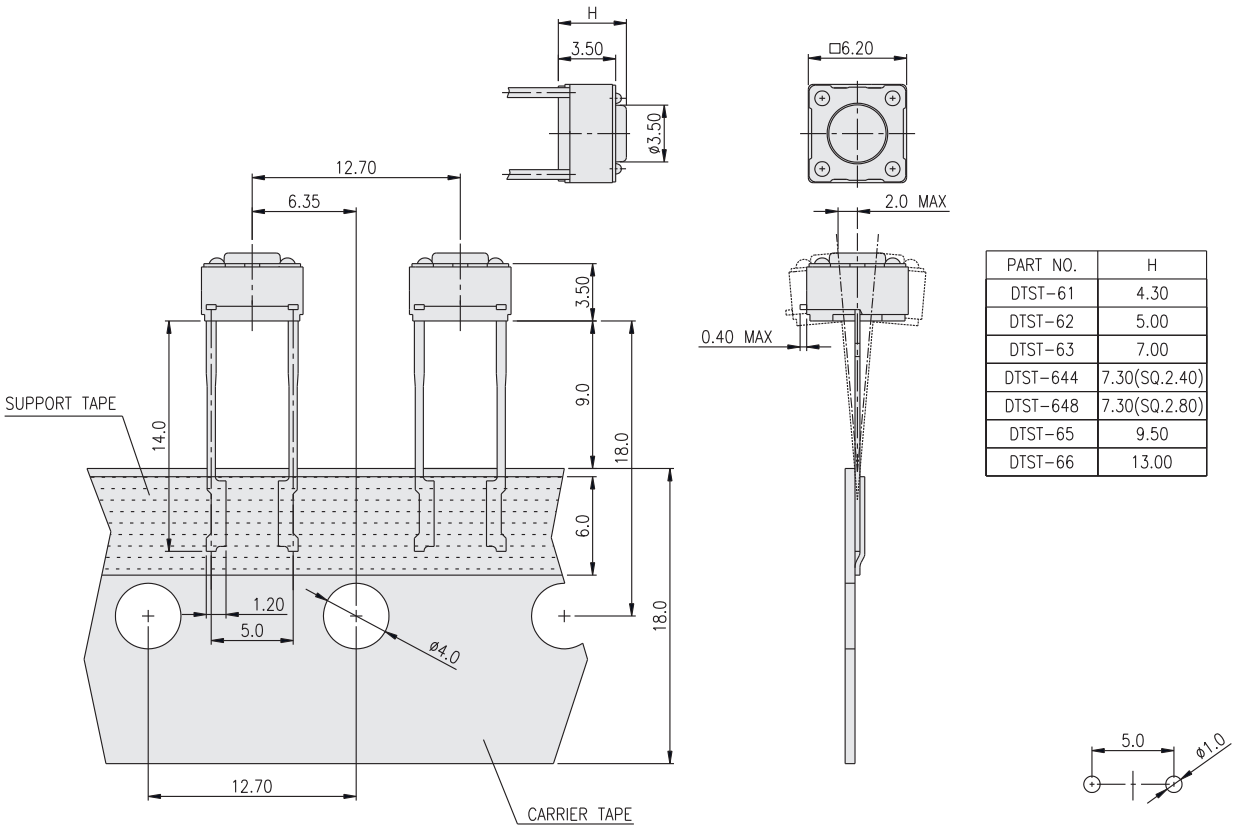

PART NO.	H
DTST-61	4.30
DTST-62	5.00
DTST-63	7.00
DTST-644	7.30(SQ.2.40)
DTST-648	7.30(SQ.2.80)
DTST-65	9.50
DTST-66	13.00