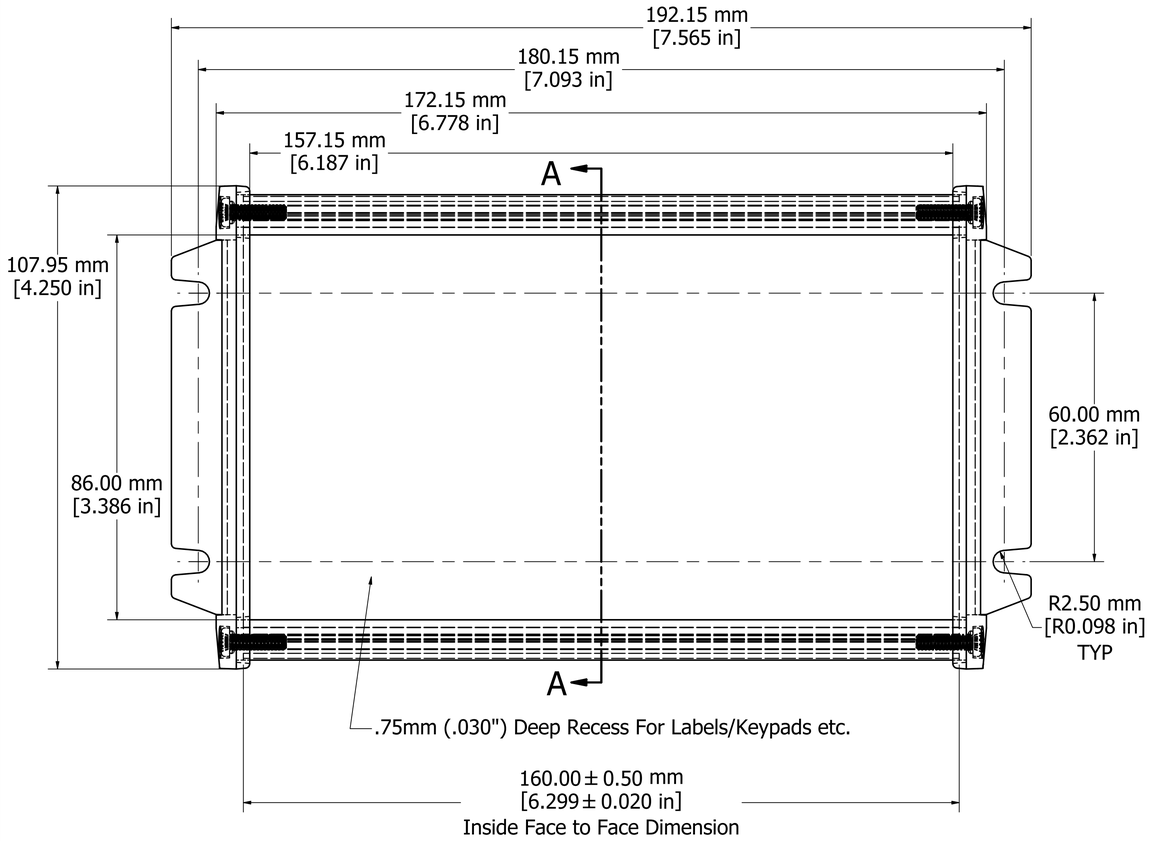

ASSEMBLY - TOP VIEW

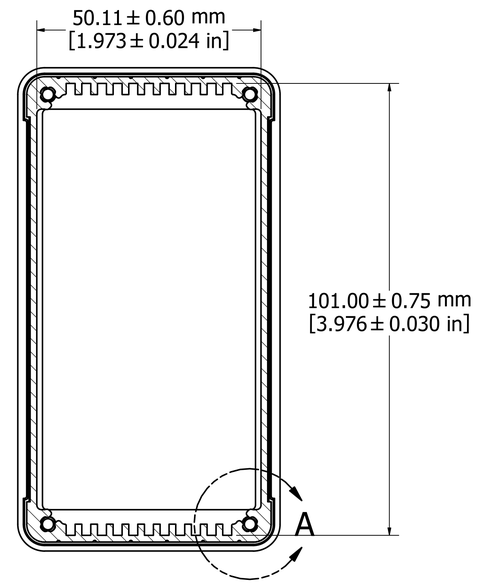

SECTION A-A

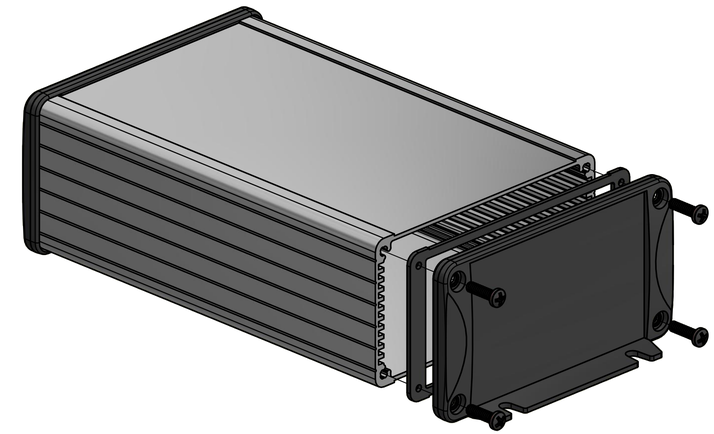

PROTECTION TO IP 65

Enclosures can be Factory Modified (Milling, Drilling, Printing etc.)
Contact Factory mjm@hammondmfg.com for quotes
Solid models of this enclosure available in STEP or IGES.

NOTE
Purchased assembly includes box, end panels, #6 Taptight screws w/ O-Rings, self adhesive rubber feet, and gaskets.
Box made from Extruded Aluminum 6063.
End panels made from Type 380 Diecast Aluminum with a black powder paint finish.

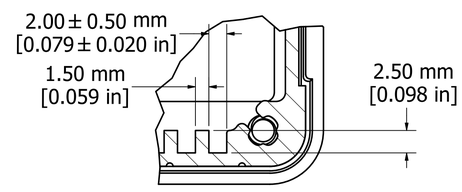

DETAIL A

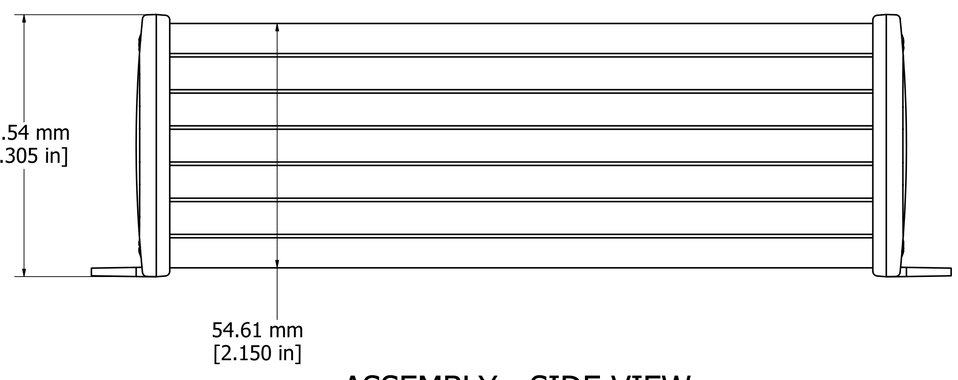

ASSEMBLY - SIDE VIEW

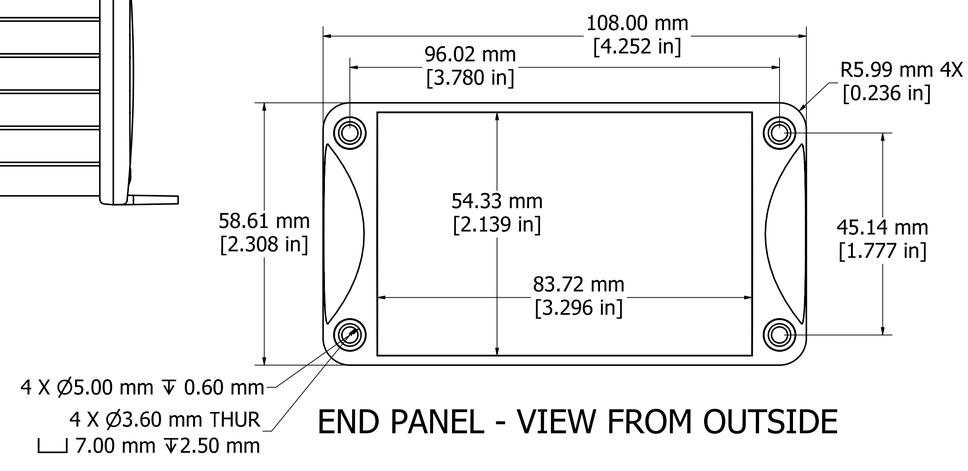

END PANEL - VIEW FROM OUTSIDE

WATERPROOF 1457N1602	
PART NUMBERS	
Clear anodized box with black powder painted end panels	1457N1602
Black powder painted box and end panels	1457N1602BK
EMI/RFI SHIELDED (IP 54)	
Clear anodized box with black powder painted end panels	1457N1602E
Black powder painted box and end panels	1457N1602EBK
ACCESSORIES	
See website for accessories.	

Fits 120mm (4.724") X 100mm (3.937") PCB

HAMMOND MANUFACTURING™

1457N1602

www.hammondmfg.com