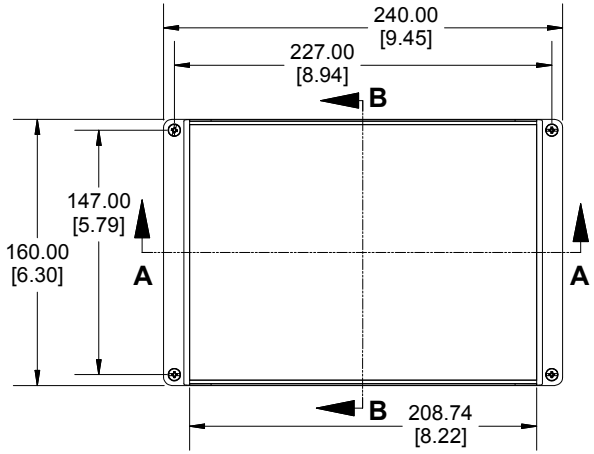

TOP VIEW

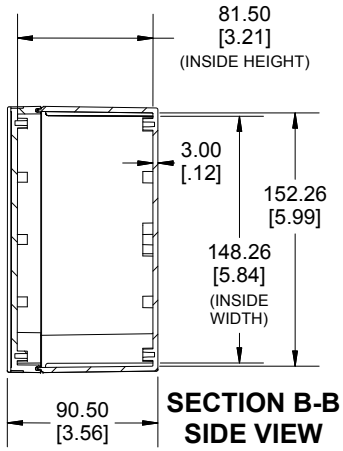

SECTION B-B
SIDE VIEW

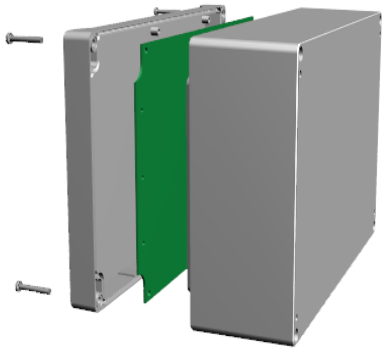

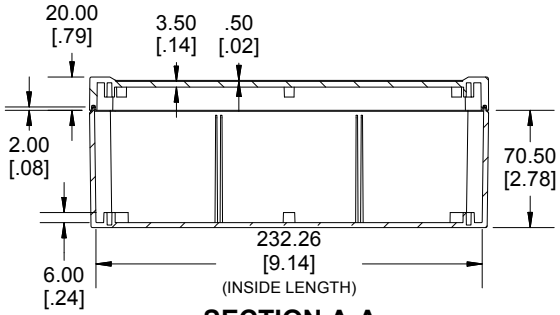

SECTION A-A
SIDE VIEW

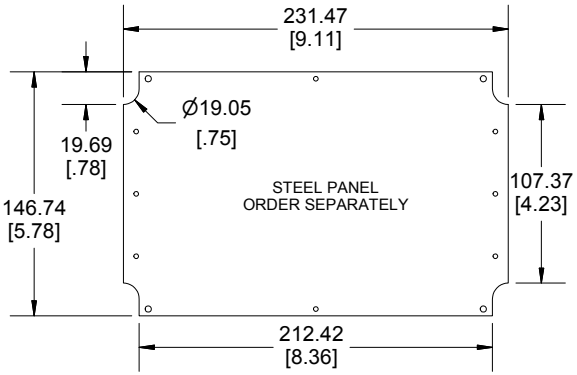

POLYCARBONATE
VERSION ONLY
C UL US LISTED
FILE #E65324
NEMA 4, 4X

Enclosures can be Factory Modified (Milling, Drilling, Printing etc.)
Contact Factory mjm@hammondmfg.com for quotes
Solid models of this enclosure available in STEP or IGES.
(Part number and text placement/orientation on our products are subject to change, we do not recommend using them as a locating reference for modification purposes)

NOTE
Purchased assembly includes box, styled lid, 4 cover screws, and preformed silicone gasket. General Purpose ABS version is not UL approved. (Matl UL94 - HB) Polycarbonate version is UL 508 approved. (Matl UL94 - 5VA @ 3mm)
Recommended Cover screw torque -- 2.5 lbf-in (30 cN-m)

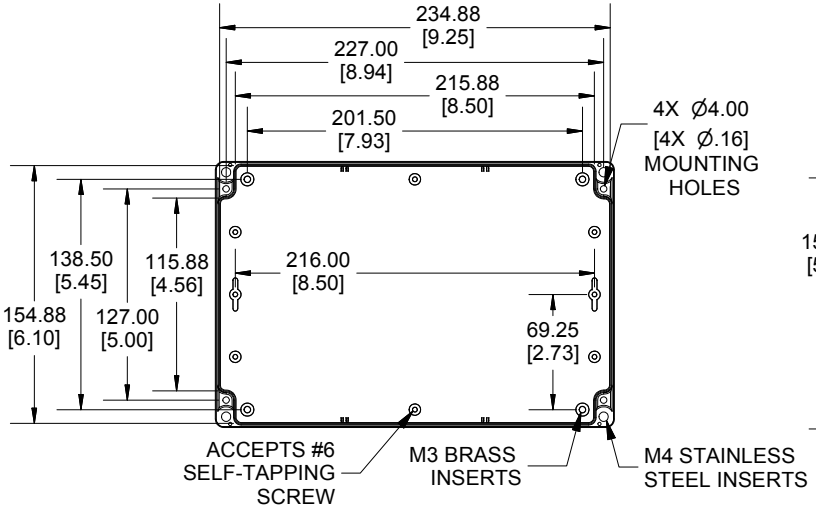

INSIDE BOX

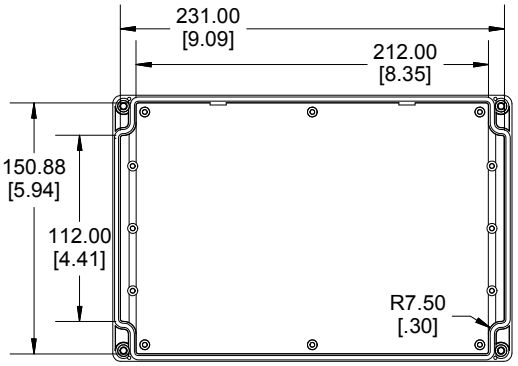

INSIDE LID

1555V	
1555V Regular Enclosure	
General Purpose ABS RAL-7035	1555VGY
Polycarbonate RAL-7035	1555V2GY
ACCESSORIES	
Steel Inner Panels	1554VPL
Steel Panel / P.C. Board Machine Screw [M3 x 8mm Plated]	1591MM100
Steel Panel / P.C. Board Self Tapping Screw [#6 X 1/4" (6.4mm) Plated]	1598ATS100
Cover Screws (Pkg 4) [M4 X 25mm Stainless Steel]	SC1554V
Silicone Pre-formed Gasket Black	1554VGASKET

Dimensions:
mm
[inches]

HAMMOND MANUFACTURING®

1555V

www.hammondmfg.com