KYCON, Inc. 1810 Little Orchard Street, San Jose, CA 95125 (408)494-0330

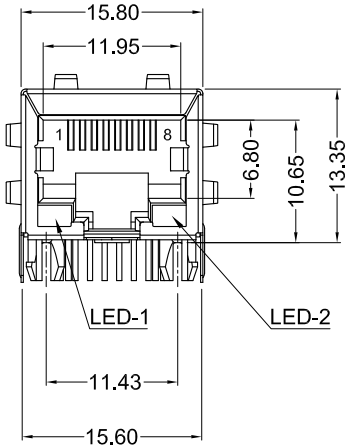

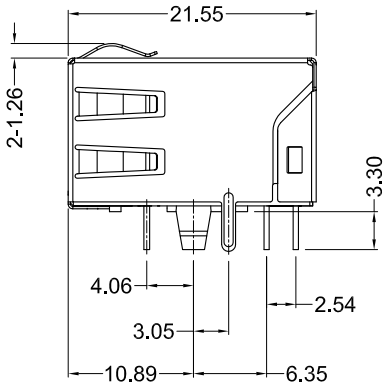

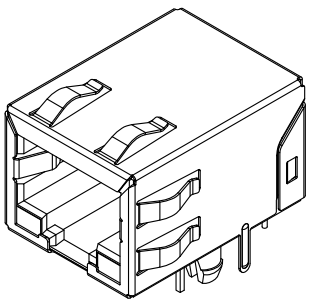

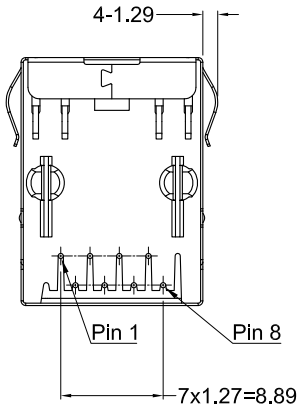

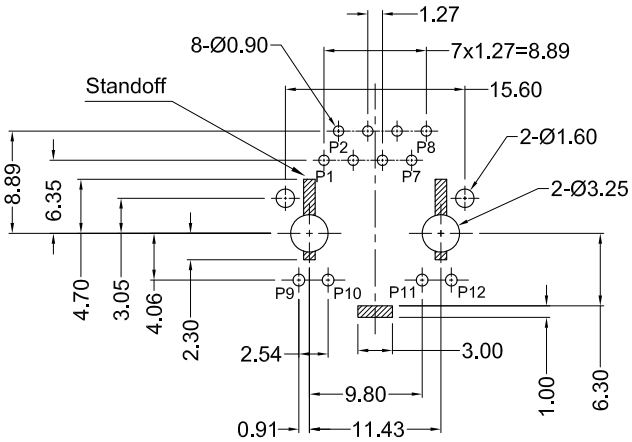

Recommended PCB Layout
(Top View)

Magnetics Schematic

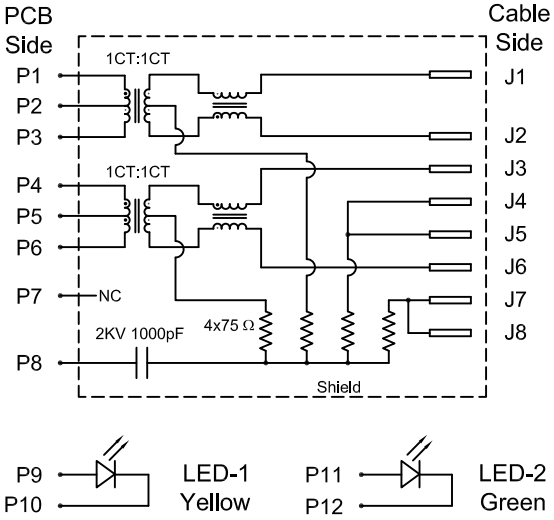

Materials and Finish

Housing Material: High Temperature Thermoplastic, UL 94V-0 Rated, Color: Black

Shield: Stainless Steel

Contact Material: Copper Alloy

Plating Options:
Standard: Nickel Underplating, Gold Flash Plating on Contact Area, Tin Plating on Solder Area

-15 Option: Nickel Underplating, 15u" Gold Plating on Contact Area, Tin Plating on Solder Area

-50 Option: 50u" Gold Plating 50u" Gold Plating on Contact Area, to Comply With ANSI/TIA-1096-A, Tin Plating on Solder Area

Electrical Characteristics

Insulation Resistance:
500 Megohms Min.

Contact Resistance:
50 milliohms Max.

Dielectric Withstanding Voltage:
500V AC Min. for 1 Minute

Mechanical Characteristics

Durability Rating:
750 Mating Cycles Min.

Operating Temperature:
0°C to +70°C

Electrical Properties:

Insertion Loss (dB Typ)	Return Loss at 100Ω (dB Min)			Cross Talk (dB Min)	CMR (dB Min)
100KHz~100MHz	1~30MHz	30~60MHz	60~80MHz	1~100MHz	30~100MHz
-1.1	-18	-16	-12	-40	-35

Part Number	Contact Area Plating Finish
G1LX-188S7-BB-YG1	Gold Flash (Standard)
G1LX-188S7-BB-YG1-15	15u" Gold (15 Option)
G1LX-188S7-BB-YG1-50	50u" Gold (50 Option)

RoHS COMPLIANT

Tolerances
X.X ± 0.35 X.XX ± 0.25 Unless Stated Otherwise

REV.	DATE	DESCRIPTION	REV. BY	CHK. BY	DRAWN BY	DATE
A0	06/16/14	New Drawing	C. Kelleher	P. DalCanto	C. Kelleher	3/25/14
A1	08/15/14	Release Drawing	D. Gih	P. DalCanto		
						UNITS
						mm

G1LX-188S7-BB-YG1

8P8C ModJack, Tab Down, Shielded, 10/100 Magnetics,

Yellow & Green LEDs, In-Line LED Leads, RoHS Compl.

KYCON